TVT

Secure The World With You

Hybrid DVR

16 CH Hybrid DVR

TD-2116NS-HL-C

HD Output | DDNS | Network | PTZ | Audio | MIC | Mobile | CMS | USB | Mouse | E-mail

The series of product can connect analog and IP cameras simultaneously, which adopts the standard H.265 high profile compression format and the advanced SOC technique to ensure real time recording in each channel and realize outstanding robustness of the system. This series supports 16 CH video input, 1 CH audio input, simultaneous 16 CH playback. The series of product can meet different security requirements of home, financial, commerce, enterprise, transportation and government, etc.

en.tvt.net.cn

For more information, please visit our website

Shenzhen TVT DIGITAL TECHNOLOGY CO., LTD.

Address: 23rd Floor, Block B4, Building NO.9, Shenzhen Bay Eco-Technology Park, Nanshan District, Shenzhen, Guangdong Province, P.R.China

Tel: +86-755-36995888

Fax: +86-755-33104777

Web site: http://en.tvt.net.cn

E-mail: overseas@tvt.net.cn

TVT TD-2116NS-HL-C Hybrid DVR

FEATURES

- Supports up to TVI/CVI/AHD 1080P / 720P analog video input
- Supports 2CH 5MP / 4MP / 3MP /1080P / 960P /720P IP video input by default
- 16CH analog video input can be switched to 16CH IP video input
- H.265/H.264 coding
- Intuitive and user-friendly Graphics User Interface (GUI), window style operation by mouse
- Multi-mode recording: manual / timed / motion / AI recording
- Playback : 16 CH simultaneously playback
- Search: time slice, time, event, tag search
- Express and flexible backup via USB, network and so on
- Pentaplex: preview, record, playback, backup and remote access
- DHCP, DDNS, PPPoE network protocol
- Remote control via Web or CMS : preview, playback, backup, PTZ and configuration
- Support remote network transmission and remote surveillance with mobile device
- Authorization management, log review and device status review
- Support 1080P output, true high resolution display
- Support PTZ preset and auto cruise, up to 255 presets and 8 cruises
- Support NAT function and QRCode scanning by mobile phones
- Powerful mobile surveillance by smart phones with iOS and Andriod OS

DIMENSIONS

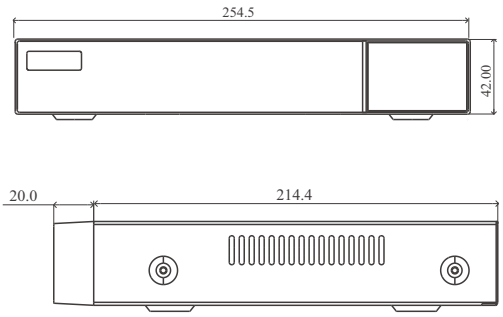

Rear Panel

TD-2116NS-HL-C

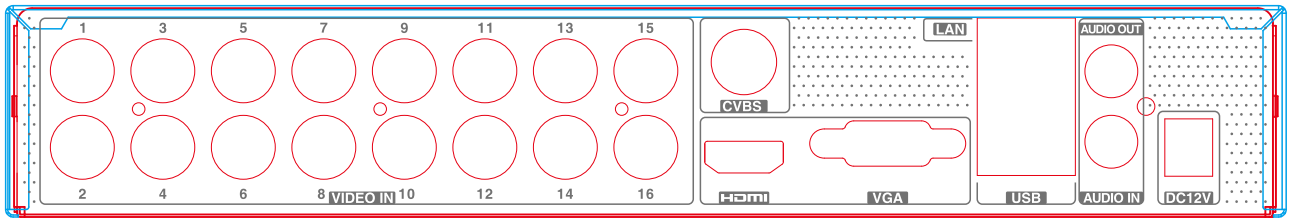

*All pictures and specifications are for reference only and are subject to change without prior notice.

SPECIFICATIONS

Model		TD-2116NS-HL-C
System	OS	Embedded Linux
Video	Analog Video Input	BNC ×16
		BNC interface (1.0Vp-p; 75Ω)
		TVI/AHD: 5MP@12.5fps/4MP@15fps; TVI/AHD/CVI: 1080P/720P@30fps; Supports CVBS
	IP Video Input	2CH (up to 18CH)
		Up to 5MP@25fps
	Total Input	18CH
	Output	HDMI × 1 :1920 × 1080 / 1280 × 1024 / 1024 × 768 VGA × 1 : 1920 × 1080 / 1280 × 1024 / 1024 × 768 BNC × 1: CVBS(used as the main or spot output)
	Compression	H.264/H.265
	Multi-screen Display	1/4/6/8/9/13/16/25
Audio	Input	RCA ×1
	Output	RCA × 1 (linear, 600Ω)
	Two-way audio	Take up channel one audio input
	Compression	G.711(U/A)
Record	Resolution	5MP Lite/4MP Lite/1080P Lite/720P/720P Lite/WD1
	Frame Rate	Analog Channel: 5MP Lite: 6fps; 4MP Lite:8fps; 1080P Lite/720P/WD1: 25fps/30fps(PAL/NTSC) (only CH 1 supports); 1080P Lite/720P/WD1: 12fps/15fps(PAL/NTSC) (other channels support); 720P Lite: 25fps / 30fps (PAL/NTSC) IP Channel: 25fps/30fps (PAL/NTSC)
	Bit Rate	32Kbps ~ 4Mbps
Playback	Playback	16CH
	Search	Time slice / time / event / tag search
	Smart Search	Highlight colors to display the camera record in a certain period of time, different colors refer to different record events
	Function	Play, pause, FF, FB, digital zoom, etc.
Alarm	Mode	Manual, motion, exception, smart event
	Input	No
	Output	No
AI Events	Smart Motion Detection	16 CH
	Perimeter Protection	No
Network	Interface	RJ 45 100Mbps × 1
	Protocol	TCP/IP, HTTP, HTTPS, 802.1x, DHCP, DDNS, FTP, RTP, RTSP, RTCP, NTP, UPnP, SMTP, IPv6, IPv4, UDP, WebSocket, PPPoE, SNMP, IGMP
	Incoming Bandwidth	16Mbps(max. 80Mbps)
	Outgoing Bandwidth	80Mbps
	Client Connection	Max.10 users access
MobileDevice	OS	iOS, Andriod
Storage	HDD	SATA× 1, up to 8TB
Backup	Local Backup	U disk, USB mobile HDD
	Network Backup	Yes
Port	RS 485	No
	USB	USB 2.0 × 2
	Remote Controller	Optional
Others	Power Supply	DC12V /2A
	Consumption	≤ 10W (without HDD)
	Dimensions(mm)	255 × 234 × 42 (W × D × H)
	Working Environment	-10~50°C, 10%~90% (humidity)
	Certificate	CE, FCC
	Environment Protection	Directive EU RoHS, WEEE, REACH

*All pictures and specifications are for reference only and are subject to change without prior notice.